GEFRAN

GFX-4

4 LOOP MODULAR POWER CONTROLLER

Main features

4 independent loop control unit.
Compact, ready to use, equipped also with fieldbus interface.

Unit consisting of:
- *Controller*
- *30, 60, 80kW solid state relay*
- *Current transformers (one or four)*
- *Fuses-holder (option)*
- *4 universal main inputs*
- *4 heat/cool independent PID*
- *4 main output internally wired to the SSR*
- *4 auxiliary analog inputs (option)*
- *4 configurable output (option): relay / logic / TRIAC / continuous*
- *2 configurable relay alarm output*
- *2 digital inputs*
- *Standard digital communication: Modbus RTU*
- *Optional Fieldbus communication: Profibus DP, CANopen, DeviceNet, Modbus RTU, Ethernet Modbus TCP*
- *DIN rail or panel mounting*

Main application

- *Packaging*
- *Extrusion*
- *Thermoforming*
- *Injection moulding*
- *Textile*
- *Multizone furnaces*

PROFILE

GFX4 is a four independent loop controller, designed to manage electrical power.
GFX4 is a compact unit bounding different technological elements like:
• controller
• solid state relay
• current transformers
• fuses-holders (option)
The final result is a cost saving in terms of space and cabling.
GFX4 consisting of:
• power management unit
• analog and digital inputs,
• analog and digital outputs
• standard digital communication
• integrated solid state relays
• fuses-holder (option)
Geflex controls autonomously the four loop controllers, furnishing a complete diagnostics like the loaded current, the control of the zones, the alarms state.
A specific step by step software tool has been develop in order to assist the product configuration based on the different applications.
Communication with the outside is of primary importance.
Geflex dialogs with the operator terminals according to the most popular protocols: from the simple and efficient Modbus to, by a second optional fieldbus communication, the by-now indispensable Profibus DP, CANopen, DeviceNet, Modbus RTU, Ethernet Modbus TCP.
The product's furnished with a standard configuration, simple and quickly to modify.
The assignment of different functions to the outputs is very simple.

MODELS

(see table in order code)
3 different sizes, depending on the electric power managed, are available.

GFX4 80
Maximum contemporaneous power up to 80kW@480V.
Each zone could reach up to 19,2 kW.
This limit could be extend to 23,7 kW using the "smart power management" (not all the zone contemporaneous).
Nominal current 40A for zone, not contemporary maximum 57A

GFX4 60
Maximum contemporaneous power up to 60kW@480V.
Each zone could reach up to 15,3 kW.
Nominal current 32A for zone
Fuse holder could be provide as an option.

GFX4 30
Maximum contemporaneous power up to 30kW@480V.
Each zone could reach up to 7,6 kW.
Nominal current 16A for zone
Fuse holder could be provide as an option.

INPUTS

Process analogue
4 universal process input could accept: thermocouple, thermoresistance, current and tension linear.
The type could be choose by software and no external converting device are required.

Digital
2 digital input.
The functionality could be selected within a wide range including setpoint selection, MAN/AUTO, alarm memory reset and many other.

Incorporated CT
From 1 to 4 CT control each zone and the relative alarm control is start up (HB..).

Auxiliary analogue (option)
4 further analogue inputs are available, typically for external current transformer reading.

OUTPUTS

Output alarms configurable via software.

Heating control
For each zone an heating control internally connected to power unit is present, then no further connections needed between power unit and controller.

Cooling control (option)
For each zone a cooling control is present 4 types of outputs are available: relay, logic, triac, continuous.
A current transformer is furnished with TRIAC output.

Alarms
Two relay output configurable as minimum and maximum alarm are available for each unit.

LEDs

Eight monitoring led are available in order to provide diagnostic information.

RN
RUN stet of the CPU
ER
Error
DI1
DI1 digital input state
DI2
DI2 digital input state
O1
Outupt 1 state
O2
Outupt 2 state
O3
Outupt 3 state
O4
Outupt 4 state

By default a different meaning is applicable.

POWER

Power is controlled with double SCR in anti-parallel, zero crossing switching principle, with configurable proportional cycle time.
Different load connection are available: monophase, dualphases, three-phases.

FUSES (OPTION)

The fuses are orderable on the GFX4 30KW and 60kW model.
Thanks to this, you save time, wiring is simplified, and dimensions in the panel are reduced.

PROGRAMMING

The Geflex modules can be programmed:
• using GFX-OP
• using Winstrum tool software
• using Industrial PC or PLC.

FUNCTIONS

Control
The Geflex control algorithm works with any type of thermal process.
Different control modes are available: from a simple ON/OFF control to PID single or double acting heat/cool (for cooling, simply indicate the fluid used).
Sophisticated and efficient automatic tuning algorithms for control parameters provide precise process control without the presence of an operator.

Alarms
There are 8 alarm assignable to each single canal or to all (AND / OR logic) and configurable as absolute, relative, direct, reverse, window, latching or not, inhibit at power-on.

Diagnostics
Geflex assures efficient process monitoring from a thermal and electrical point of view, allowing the operator to foresee breakdowns or malfunctions and take timely action (for example, in case the temperature safety limit is exceeded, broken probe, load fault).
The LBA alarm precisely checks the control loop, while the on-board current transformer (one always present, four available in option) lets you directly monitor load and trip the HB alarm in case of current failure or SSR in short circuit.
Detection of short circuit or opening of input probe, open loop alarm (LBA), interrupted load alarm (HB).
Over temperature alarm
The software can be used to define the state of alarm outputs or a preset power level to be supplied in case of broken probe.
This assures continuity of service in the individual zone.

Tuning

• Self-tuning:
calculation of PID parameters at system art.
• Auto-tuning continuous: continuous adjustment of PID
• Autotuning one-shot: output modulation and event-driven automatic PID parameters re-calculation

Special functions

• Soft-start: power parcellization time-based
• Software Off: disabling of the control, outputs are turned off
• Inputs\outputs: direct management of inputs/outputs, independently from internal firmware
• Simulation of four independent Geflex units.

STANDARD DIGITAL COMMUNICATION

The product is furnished with standard digital communication [PORT 1] used as GFX4 connection to a HMI or Industrial PC.
Also by a dedicated connector (10 pins) it's possible to connect the actual range of Gefllex.
A second standard digital communication (PORT 2) configurable by most popular protocol:
CANopen
DeviceNet
Profibus DP
Modbus RTU
Ethernet Modbus TCP
is available as option.

Net address
Assigned by two rotative selectors.

GENERAL DESCRIPTION

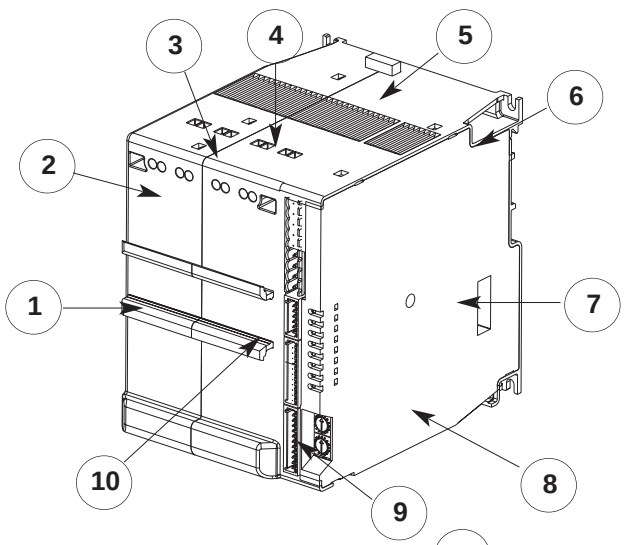

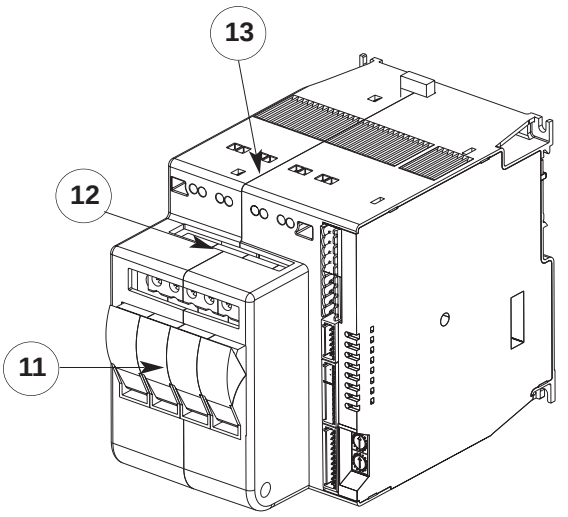

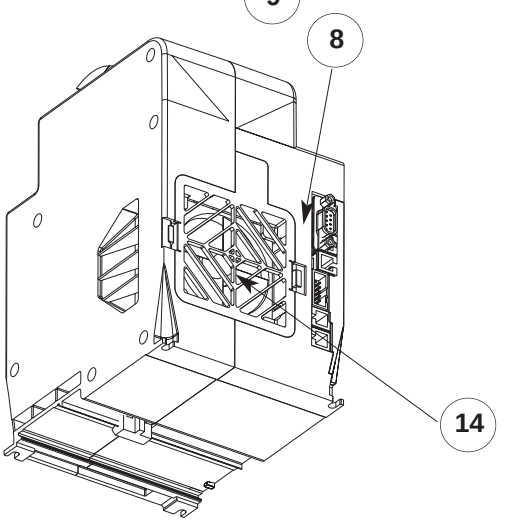

1. DIN rail frontal
2. power terminal: screws
3. power terminal
4. ventilation grid (attention NOT obstruct)
5. hook/release device back DIN rail
6. hole for screws
7. microswitchs of configuration
8. standard digital communication
9. rotative selector switch
10. connectors J1, J2, J3, J4
11. fuses-holder (only for 30KW and 60KW models)
12. fuses-holder terminal (F1, F2, F3, F4)
13. power terminal (U1, U2, U3, U4)
14. ventilation grid (attention NOT obstruct)

DIMENSIONS - INSTALLATION

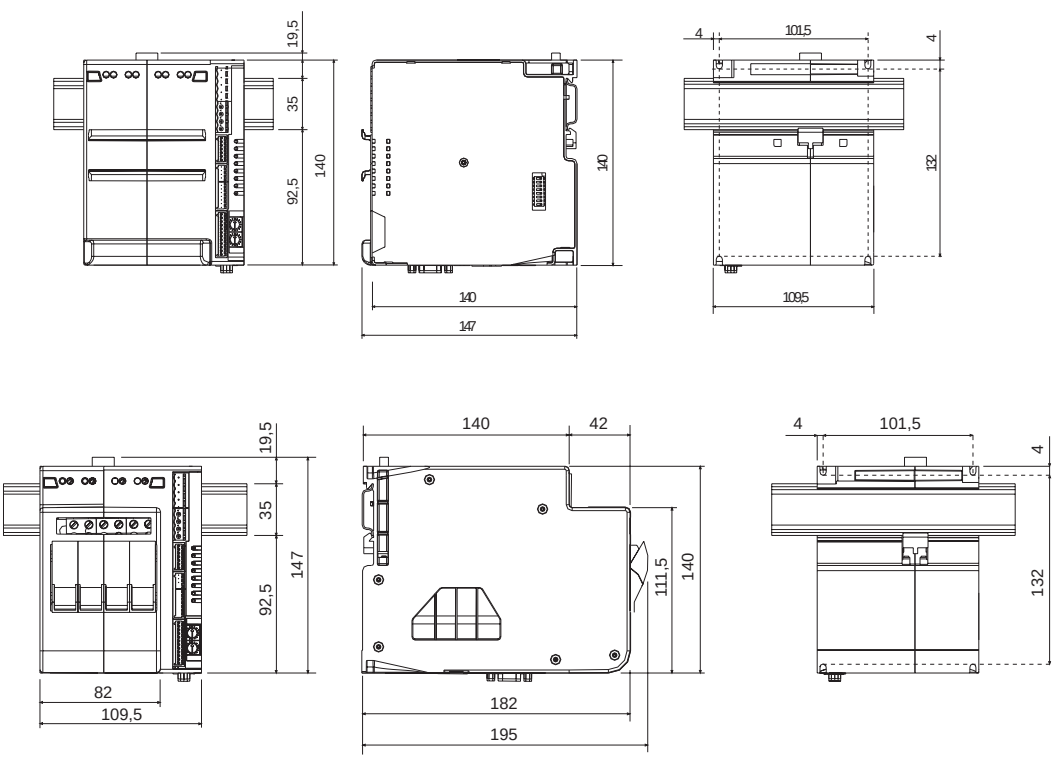

TECHNICAL DATA

INPUTS

IN1...IN4 [process analog inputs]
Connector: J4

Function
default process variable (configurable)
Sampling time
120msec the four inputs
Accuracy
0,2% FS ±1 steps at 25°C. (16000 points)
Thermal drift
0,005% FS/°C
Type
• *Thermocouples ITS90:*
J, K, R, S, T, custom (IEC584-1, CEI EN 60584-1, 60584-2).
Internal cold junction compensation with automatic compensation.
Selectable temperature range: °C/°F
• *Thermoresistance:* Pt100 DIN 43760
Max. resistance 20Ω
Selectable temperature range: °C/°F
• *Voltage:* range 0/12...60mV, Ri > 1MΩ
0/0,2…1V, Ri > 1MΩ custom 60mV at 32 sections
• *Current:* range 0/4...20mA , Ri = 50Ω
custom 20mA at 32 sections

IN5...IN8 [auxiliary analogue inputs]
Connector: J3

Function
default analog inputs reading
Sampling time
480msec for TC, voltage
Accuracy
1% FS ±1 steps at 25°C.
Type
• *Thermocouple ITS90:*
J, K, R, S, T, custom (IEC584-1, CEI EN 60584-1, 60584-2).
Internal cold junction compensation with automatic compensation.
• *Voltage:*
range 0/12...60mV, Ri > 1MΩ

IN9...IN12 [internal CT input]
Connector: internal connection

Function
default internal CT reading
Sampling time
60msec for CT
Accuracy
1% FS ±1 steps at 25°C.
Type
internal CT: 50mAac, 50/60Hz, Ri = 10Ω

DI1, DI2 [digital inputs]
Connector: J2

Function
default not enable (configurable)
Type
PNP, 24Vdc, 8mA (isol. 3500V)

OUTPUTS

OUT 1...4 [heating control]

outputs connected to solid state relay

Function
default heating control (configurable)

OUT 5...8 [cooling control]
Connector: J1

Function
default cooling control (configurable)
Type
• Relay: NO, max 3A, 250V/30Vdc, cosφ = 1, resistive load
• Logic: 24Vdc, 35mA
• Continuous:
• voltage: 0/2...10V, ±10V, max 25mA short circuit protection
• current: 0/4...20mA, 500Ω max
• insulation: 3500V
• Triac: 230V/4Amp AC51
(1A for four)
(2A for two)

OUT 9...10 [alarms]
Connector: J1a/J1

Function
default alarms (configurable)

Type
Relay: NO, max 5A, /30Vdc, cosφ = 1

LEDs

RN . . . . . .RUN state of the CPU
ER . . . . . .error
DI1 . . . . . .DI1 digital input state
DI2 . . . . . .DI2 digital input state
O1 . . . . . .Out.1 main input state
O2 . . . . . .Out.2 main input state
O3 . . . . . .Out.3 main input state
O4 . . . . . .Out.4 main input state

COMMUNICATION PORTS

PORT 1 [local bus]
Connectors: S1 / S2 / S3

Function: local bus
Protocol: Modbus RTU
Baud Rate: 115Kbps (default)
setting 1200...115Kbps
Node address: setting by double rotative selector
Connector S1 / S2: 2xRJ114/4, RS485 2 wires insul. 1500V
Connector S3: 10 pins for flat cable

SERIAL 2 [fieldbus]
Connectors: S4 / S5
Function
external fieldbus

Protocol
Modbus RTU _____115Kbps
CANopen _____10K...1Mbps
Profibus DP _____9,6...12Mbps
DeviceNet_____125K...500Kbps
Ethernet Modbus TCP 10/100Mbps

See accessories

MICROSWITCHES

8 dip switches are available to select wiring mode and different functionalities.

POWER

SSR [integrated power element]

Rated voltage: 480Vac
Work voltage range: 24...530Vac
Non-repetitive voltage: 1200Vp
Switching voltage for zero: < 20V
Rated frequency: 50/60Hz (self-adjusting)
Rated current AC51
GFX-4 30kW: 16Amp
GFX-4 60kW: 32Amp
GFX-4 80kW: 57Amp
Non-repetitive overcurrent [t=20msec]
GFX-4 30kW: 400A
GFX-4 60kW: 600A
GFX-4 80kW: 1150A
I^2t for melt [t=1...10msec]
GFX-4 30kW: 645A^2s
GFX-4 60kW: 1010A^2s
GFX-4 80kW: 6600A^2s
Dv/dt critical with deactivated output:
1000V/µsec
Rated insulation voltage In/Out:
4000V

GENERAL FEATURES

Power supply:
24Vdc ±25%, max 8VA
Protection class:
IP20
Working temperature range:
0...50°C (see dissipation curves)
Storage temperature range:
-20...+70°C
Relative humidity:
20...85% UR non-condensing
Installation:
EN50022 DIN rail or panel by screw
Dimensions:

ELECTRICAL CONNECTIONS

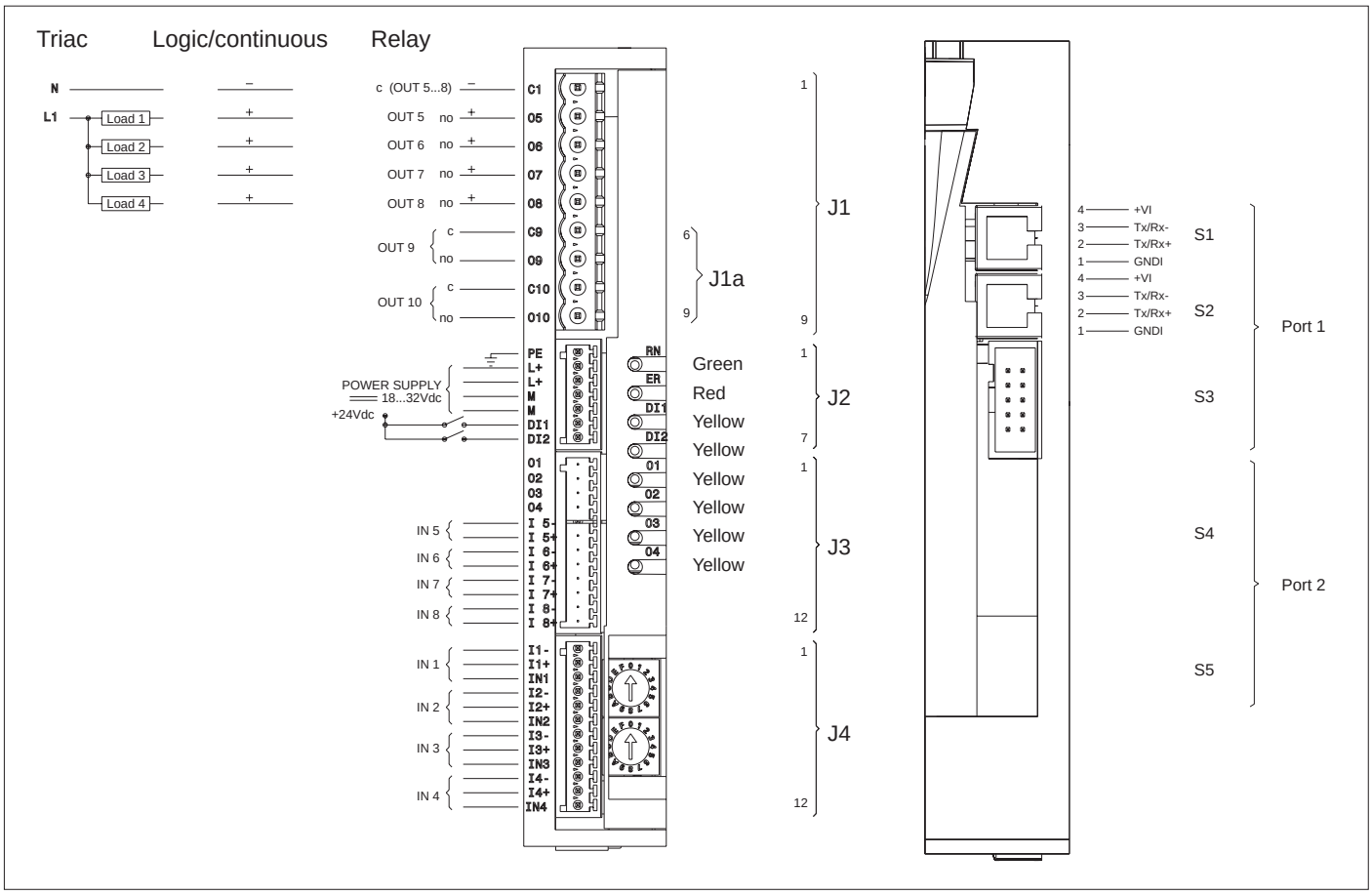

power

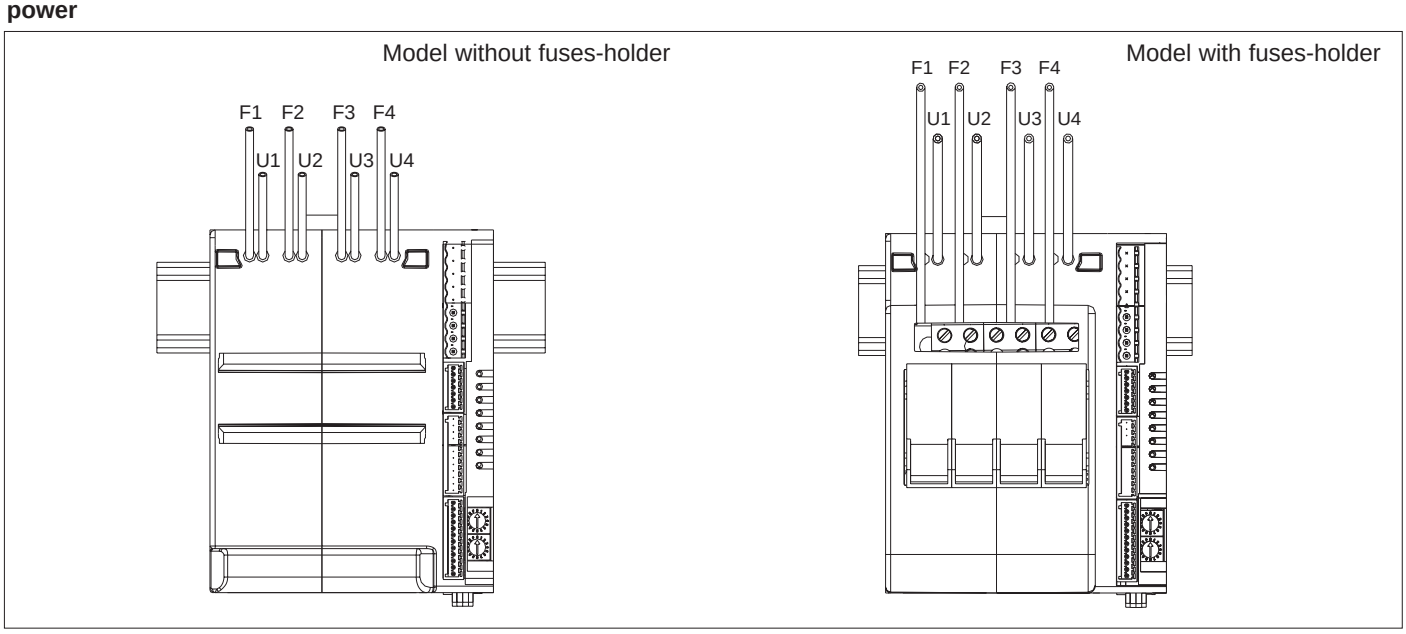

Model	30kW		60kW		80kW	
max current	16A		32A (30A)*		57A (40A)*	
rigid	**0,2 - 6mm²**	**24-10AWG**	**0,2 - 6mm²**	**24-10AWG**	**0,5 - 16mm²**	**20-6AWG**
flexible	**0,2 - 4mm²**	**24-10AWG**	**0,2 - 4mm²**	**24-10AWG**	**0,5 - 10mm²**	**20-7AWG**
	0,25 - 4mm²	**23-10AWG**	**0,25 - 4mm²**	**23-10AWG**	**0,5 - 10mm²**	**20-7AWG**
	0,25 - 4mm²	**23-10AWG**	**0,25 - 4mm²**	**23-10AWG**	**0,5 - 10mm²**	**20-7AWG**
	0,5 - 0,6Nm		**0,5 - 0,6Nm**		**1,2 - 1,5Nm**	

* UL certification

ORDER CODE

Model GFX4	Current (Amp) max for channel		Voltage (Vac) range	Voltage (Vac) nominal	Voltage (Vac) working	Power (kW) total contemporary	Power (kW) single channel	Power (kW) max for single channel
30 (4x16A)	16		24...530	480	110	(4x16x110) **7**	(16x110) **1,7**	(1x16x110) **1,7**
					230	(4x16x230) **14,7**	(16x230) **3,6**	(1x16x230) **3,6**
					400	(4x16x400) **25,6**	(16x400) **6,4**	(16x400 **6,4**
					480	(4x16x480) **30,7**	(16x480) **7,6**	(1x16x480) **7,6**
60 (4x32A) (4x30A)*	32 (30)*		24...530	480	110	(4x32x110) **14**	(32x110) **3,5**	(32x110) **3,5**
					230	(4x32x230) **29,4**	(32x230) **7,3**	(1x32x230) **7,3**
					400	(4x32x400) **51,2**	(32x400) **12,8**	(1x32x400) **12,8**
					480	(4x32x480) **61,4**	(32x480) **15,3**	(1x32x480) **15,3**
80 (4x40A)	40*	57	24...530	480	110	(4x40x110) **17,6**	(40x110) **4,4**	(1x57x110) **62,7**
					230	(4x40x230) **36,8**	(40x230) **9,2**	(1x57x230) **13,1**
					400	(4x40x400) **64**	(40x400) **16**	(1x57x400) **22,8**
					480	(4x40x480) **76,8**	(40x480) **19,2**	(1x57x480) **27,3**

* UL Certificate

GFX4 [ ] [ ] [ ] [ ] [ ]

NOMINAL POWER	
30KW	30
60KW	60
80KW	80

AUXILIARY OUTPUTS	
Absent	0
Relay	R
Logic	D
Continuous	C
Triac	T

FIELDBUS	
0	Absent
M	Modbus RTU
P	Profibus DP
C	CANopen
C1	Euromap 66
D	DeviceNet
E	Ethernet Modbus TCP
E1	Ethernet IP

FUSES	
0	Absent
F	fuses-holder + fuses extrarapid (*)

(*) Available only for 30, 60kW power.

AUXILIARY INPUTS	
1	1 Current Transformer
2	4 Current Transformers
3	1 Current Transformer + 4 Linear inputs
4	4 Current Transformers + 4 Linear inputs

GEFRAN spa reserves the right to make aesthetic or functional changes at any time and without notice.

GEFRAN

GEFRAN spa via Sebina, 74 - 25050 Provaglio d'Iseo (BS)
Tel. 03098881 - fax 0309839063
Internet: http://www.gefran.com